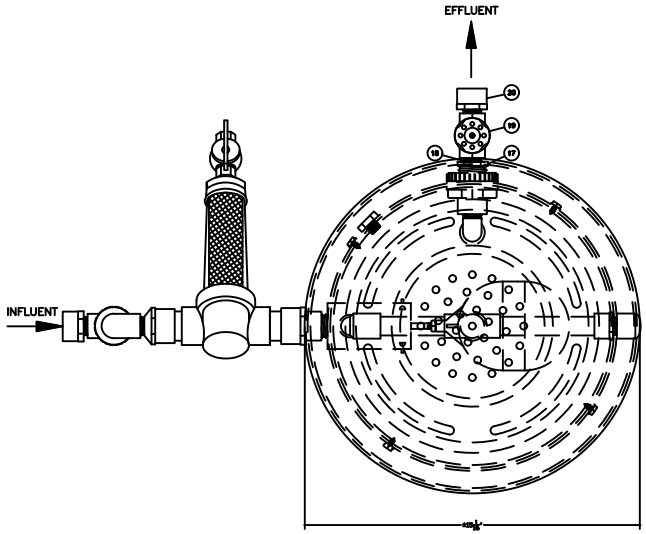

SYSTEM PLAN

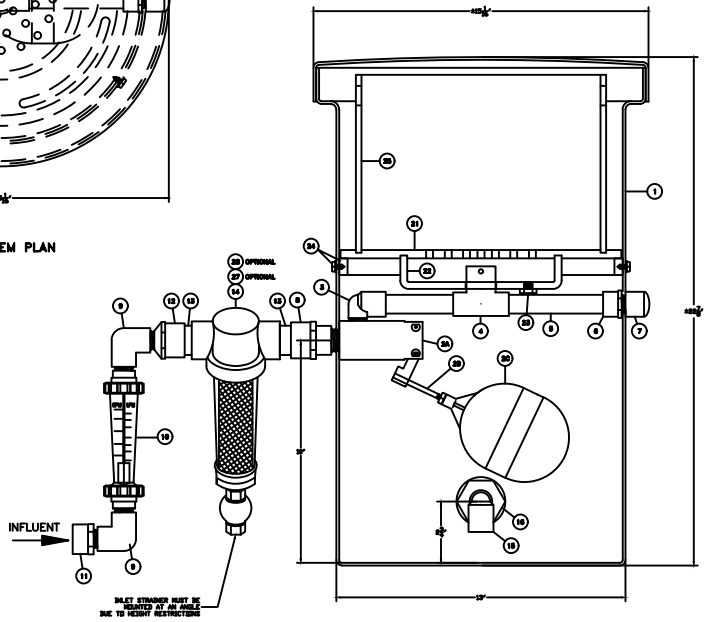

SYSTEM ELEVATION

BILL OF MATERIAL VersaChlor I(a)

ITEM	QUAN.	DESCRIPTION
1	1	CHEMTANKER 10 GAL. TANK W/ LID MODEL TC1321 13 1/2"x21"H
2A	1	MILLER PLASTICS FLOAT VALVE, 3/4-0.312-1/2
2B	1	3" 316 SS ROD
2C	1	4"ø X 5" LG. FLOAT BALL
3	1	1/2" STREET ELL, MPT X SOC, SCH. 40 PVC
4	1	1/2" X 1/2" X 3/4" SOC TEE, SCH. 40 PVC
5	A.R.	1/2" SCH. 40 PVC PIPE
6	1	1/2" SCH. 40 PVC MALE ADAPTOR
7	1	1/2" SCH. 40 PVC CAP, FPT
8	1	1" SOC X 3/4" FPT ADAPTOR, SCH. 40 PVC
9	2	1/2" 90° ELL, FPT X FPT, SCH. 40 PVC
10	1	FLOWMETER, BLUE & WHITE F-44500LN-8
11	1	1/2" MPT X 3/4" SOC ADAPTOR, SCH. 40 PVC
12	1	1" SOC X 1/2" MPT ADAPTOR, SCH. 40 PVC
13	A.R.	1" SCH. 40 PVC PIPE
14	1	1" RUSCO 100 MESH INLET FILTER
15	1	3/4" STREET ELL, MPT X SOC, SCH. 40 PVC
16	1	3/4" BULKHEAD FITTING, T X T
17	1	3/4" X 1/2" REDUC. BUSHING, T X T, SCH. 40
18	1	1/2" CLOSE THD. PVC NIPPLE
19	1	1/2" PVC GATE VALVE, FPT
20	1	3/4" SOC X 1/2" MPT ADAPTOR, SCH. 40 PVC
21	1	3/8" PVC SIEVE PLATE-(33) 3/8"ø HOLES
22	1	SIEVE PLATE DISTRUBUTOR-6" DWV CAP, INCLUDE 3/16" DRAIN HOLE IN SIDE
23	1	DRILL, TAP & INSTALL 3/8" PLUG ON BOTTOM
24	1	SUPPORT RING, 12"ø PIPE X 3/4" TALL, HELD IN PLACE WITH (4) PVC BOLTS
25	1	INTERNAL BASKET OF 11" DUCT, CEMENTED TO SIEVE PLATE. HEIGHT 8". (2) THUMB HOLES AT TOP
SYSTEM OPTIONS		
26	4	WEDGE FEET
27	1	1 1/2" RUSCO 100 MESH INLET FILTER
28	1	2" RUSCO 100 MESH INLET FILTER
29	1	WEBTROL PUMP, 0.75 HP
30	1	1" PRE-WIRED SOLENOID VALVE (CABLE/PLUG)

DEPT: AXIALL WATER TREATMENT PRODUCTS

TITLE: VersaChlor I(a) 10-21-2013

WTP

DRAWN: RMH DATE: 24 MAY 2017

SCALE: 1/2" = 1"

DWG VERSACHLOR I(a)

REV 0